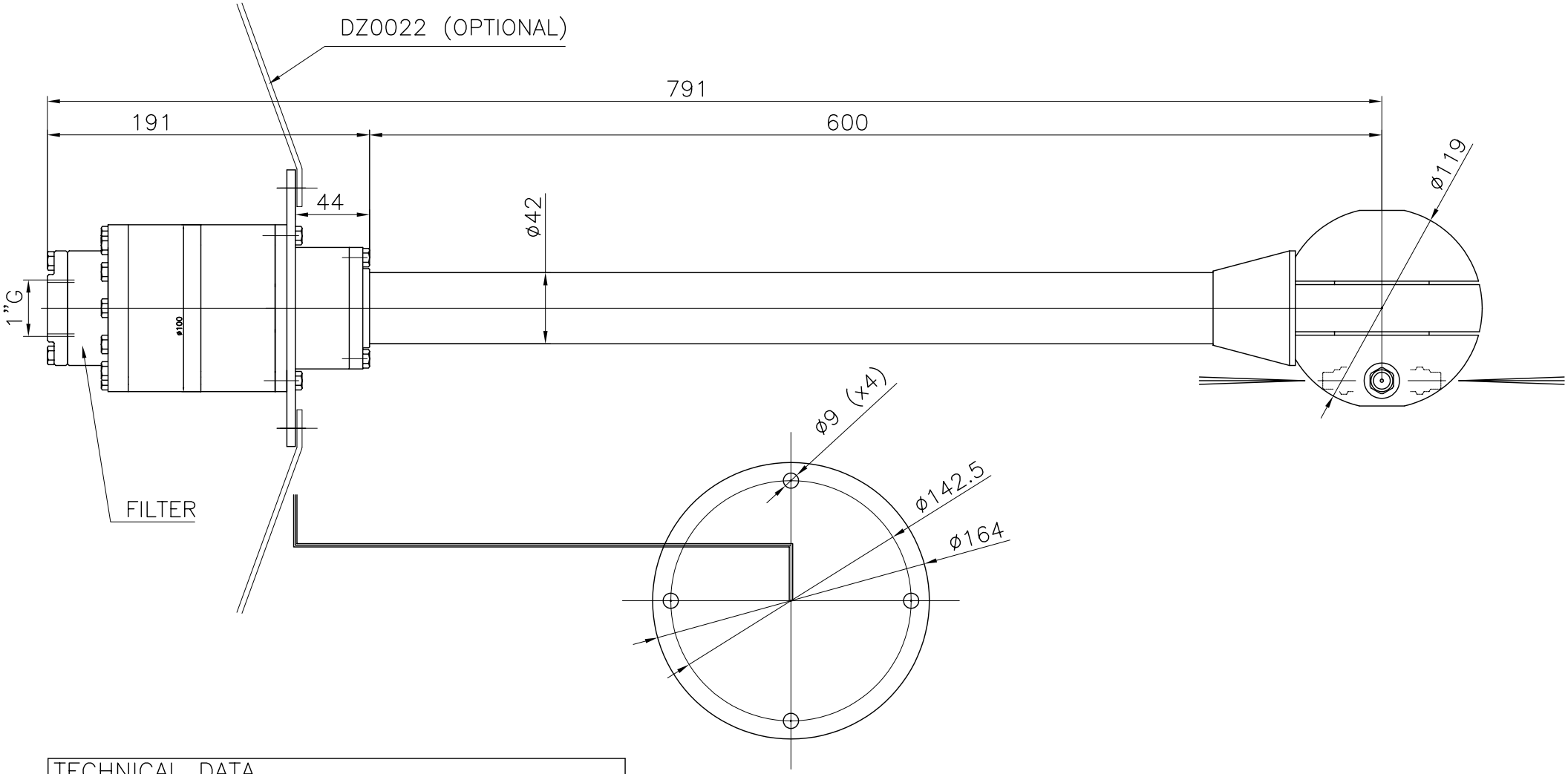

TECHNICAL DATA	
temperature max	90°C
pressure max	200 bar
flow	60–200 l/min
spinning speed	15 rpm
washing cicle time	6 min
min. pass–through hole dia.	120 mm
water inlet	1"G
inlet filter	700 micron
nozzle size	1/4"NPT
nozzles positions	2 – 4
weight	X.X Kg

file: XB 200AA.01 comm

RUGOSITA' (UNI 4600)	MODIFICA	1	2	3	4	5	Bolondi CLEANING HEADS MONTECCHIO E. (RE) – ITALY
	FOGLIO	XXXX					
	DATA	XX.XX.XX					
GREZZO ~ = 0	TOLLERANZE GENERALI classe m UNI–EN 22768/1						
	0÷6	6÷30	30÷120	120÷400	400÷1000	1000÷2000	
SGROSS. ▽ = 3.2	±0.1	±0.2	±0.3	±0.5	±0.8	±1.2	
FINITURA ▽▽ = 1.6	NOTE:						DISEGN.: CR CONTR.: DM DATA: 01.12.06 MOD.
RETTIFICA ▽▽▽ = 0.8	MATERIALE: INOX						SCALA 1:3 A4 0
	DESCRIZIONE: XB 200–AA INSTALLATION DRAWING						CODICE: XB 200–AA